12V P-Channel Enhancement Mode MOSFET

Description

The PECN1216DR uses advanced trench technology to provide excellent $R_{DS(ON)}$, low gate charge and operation with gate voltages as low as 1.8V. This device is suitable for use as a load switch or in PWM applications.

General Features

- V_{DS} =-12V，I_D =-16A
  $R_{DS(ON)}$(Typ.)=18mΩ @V_{GS}=-2.5V
  $R_{DS(ON)}$(Typ.)=13mΩ @V_{GS}=-4.5V
- High power and current handing capability
- Lead free product is acquired
- Surface mount package

Application

- PWM applications
- Load switch

Package

- DFN2*2-6L-B

Schematic diagram

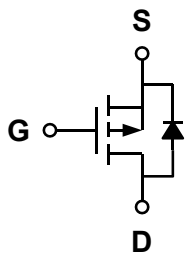

Marking and pin assignment

DFN2*2-6L-B

（Thickness 0.55mm）

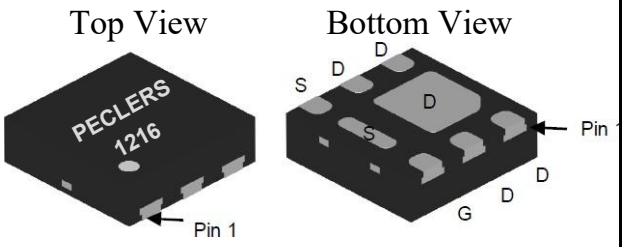

1216----PECLERS 1216

Ordering Information

Part Number	Storage Temperature	Package	Devices Per Reel
PECN1216DR	-55°C to +150°C	DFN2*2-6L-B	4000

Absolute Maximum Ratings (TA=25℃ unless otherwise noted)

parameter		symbol	limit	unit
Drain-source voltage		V_{DS}	-18	V
Gate-source voltage		V_{GS}	±12	V
Drain current-continuous	T_C=25℃	I_D	-16[a]	A
	T_C=70℃		-16[a]	
	T_A=25℃		-16[a,b,c]	
	T_A=70℃		-12[b,c]	
Drain-source Diode forward current	T_C=25℃	Is	-16[a]	A
	T_A=25℃		-2.9[b,c]	
Maximum power dissipation	T_C=25℃	P_D	18	W

	T_C=70℃		12	
	T_A=25℃		3.5[b,c]	
	T_A=70℃		2.2[b,c]	
Operating junction Temperature range		Tj	-55—150	℃

Thermal Resistance Ratings

Parameter		Symbol	Typ.	Max.	Unit
Maximum junction-to-ambient[b,d]	t ≤ 5 s	R_{thJA}	28	36	℃/W
Maximum junction-to-case (drain)	Steady state	R_{thJC}	5.3	6.5	

Notes:

a. Package limited； b. Surface mounted on 1" x 1" FR4 board

c. t = 5 s； d. Maximum under steady state conditions is 80 °C/W

Electrical Characteristics (TA=25℃ unless otherwise noted)

Parameter	Symbol	Condition	Min	Typ	Max	Unit
OFF Characteristics						
Drain-source breakdown voltage	BV_{DSS}	V_{GS} =0V, I_D=-250μA	-12	-18	-	V
Zero gate voltage drain current	I_{DSS}	V_{DS}=-12V, V_{GS}=0V	-	-	-1	μA
Gate-body leakage	I_{GSS}	V_{DS}=0V, V_{GS}=±12V	-	-	±100	nA
ON Characteristics						
Gate threshold voltage	$V_{GS(th)}$	V_{DS}=V_{GS}, I_D=-250μA	-0.5	-0.75	-1.2	V
Drain-source on-state resistance	$R_{DS(ON)}$	V_{GS} =-4.5V, I_D=-8A	-	13	15	mΩ
		V_{GS} =-2.5V, I_D=-6A	-	18	23	
Forward transconductance	gfs	V_{DS}=-6V, I_D=-7A	-	32	-	S
Dynamic Characteristics						
Input capacitance	C_{ISS}	V_{DS}=-6V, V_{GS} =0V f=1.0MHz	-	1300	-	pF
Output capacitance	C_{OSS}		-	380	-	
Reverse transfer capacitance	C_{RSS}		-	280	-	
Switching Characteristics						
Turn-on delay time	$t_{D(ON)}$	V_{DD}=-10V I_D=-5A V_{GEN}=-4.5V R_L=1。2ohm R_{GEN}=1ohm	-	11	-	ns
Rise time	tr		-	35	-	
Turn-off delay time	$t_{D(OFF)}$		-	30	-	
Fall time	tf		-	10	-	
Total gate charge	Qg	V_{DS}=-6V, I_D=-9A V_{GS}=-4.5V	-	13	-	nC
Gate-source charge	Qgs		-	3	-	
Gate-drain charge	Qgd		-	5	-	
DRAIN-SOURCE DIODE CHARACTERISTICS						
Diode forward voltage	V_{SD}	V_{GS}=0V, Is=-1.25A	-	-0.7	-1.2	V

Typical Performance Characteristics

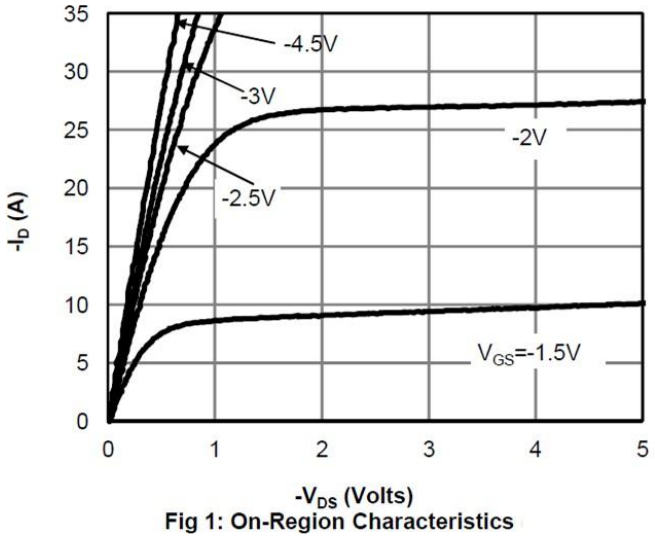

Fig 1: On-Region Characteristics

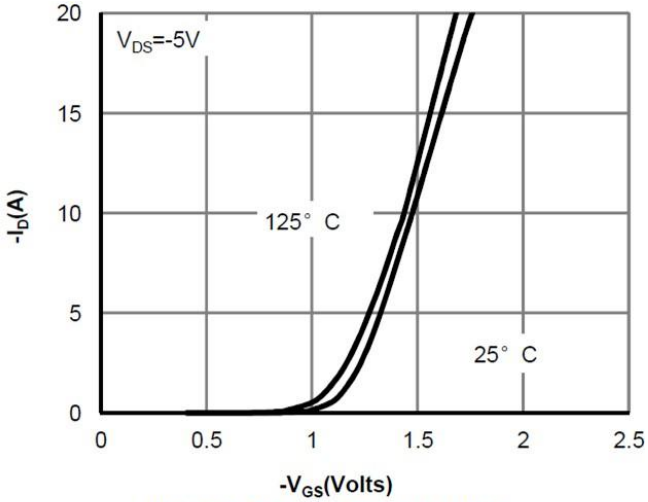

Figure 2: Transfer Characteristics

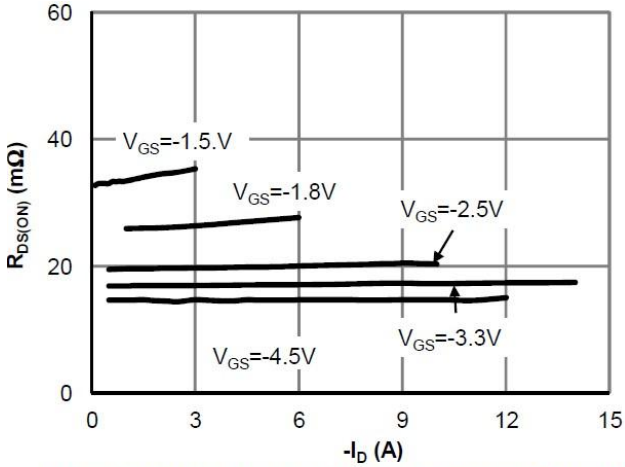

Figure 3: On-Resistance vs. Drain Current and Gate Voltage

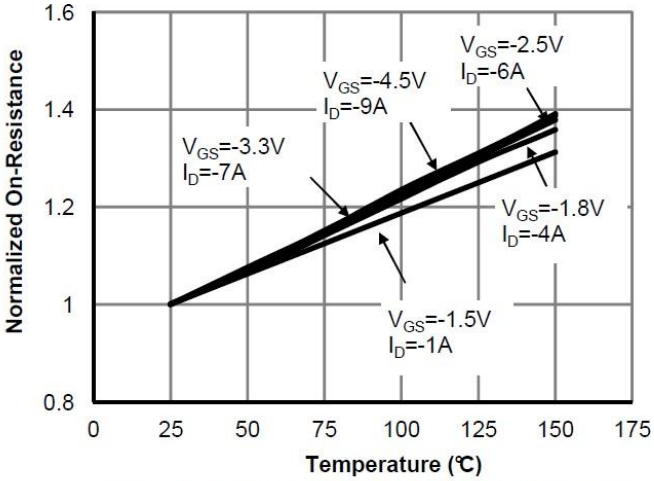

Figure 4: On-Resistance vs. Junction Temperature

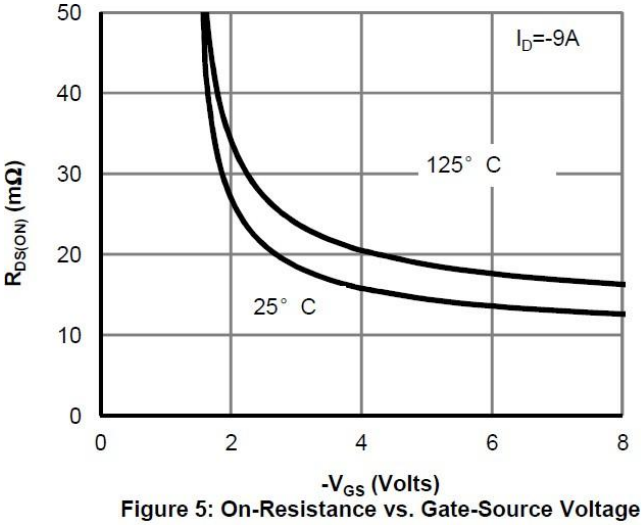

Figure 5: On-Resistance vs. Gate-Source Voltage

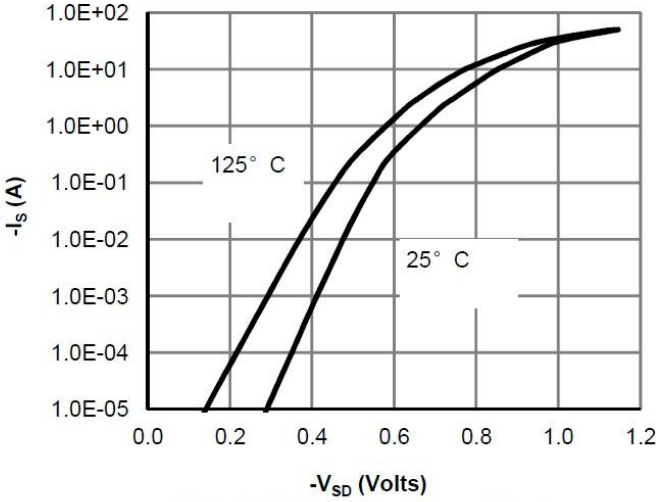

Figure 6: Body-Diode Characteristics

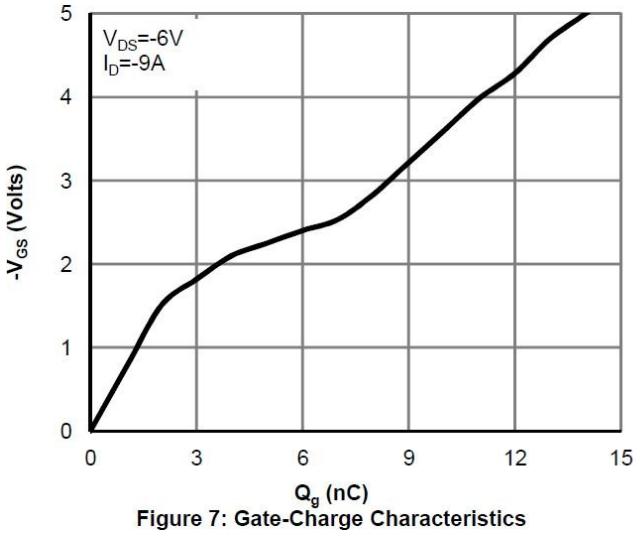

Figure 7: Gate-Charge Characteristics

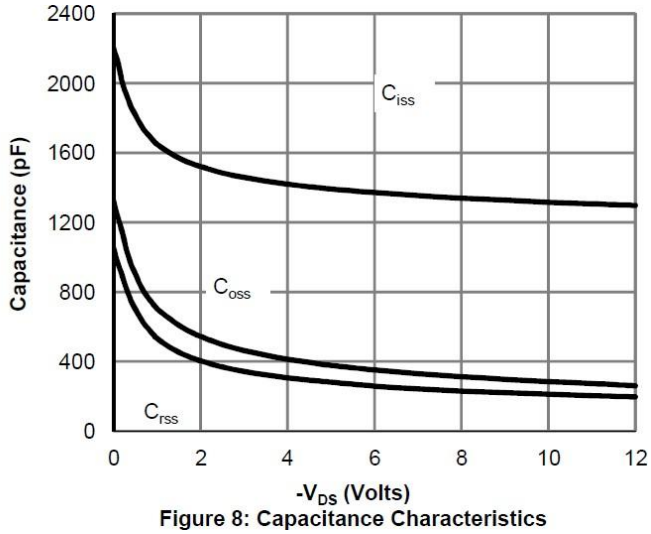

Figure 8: Capacitance Characteristics

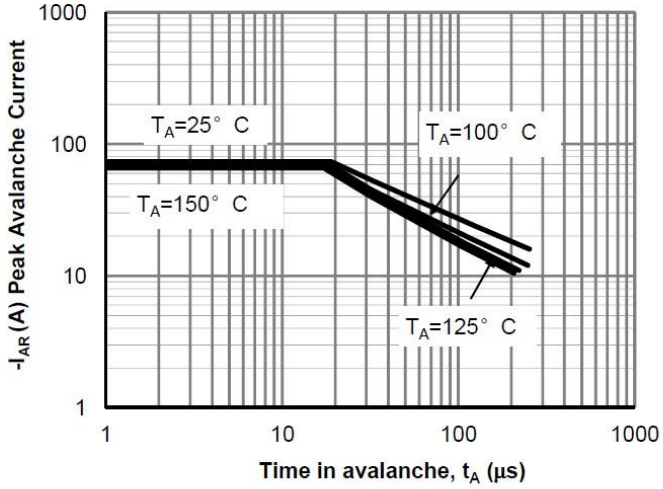

Figure 9: Single Pulse Avalanche capability

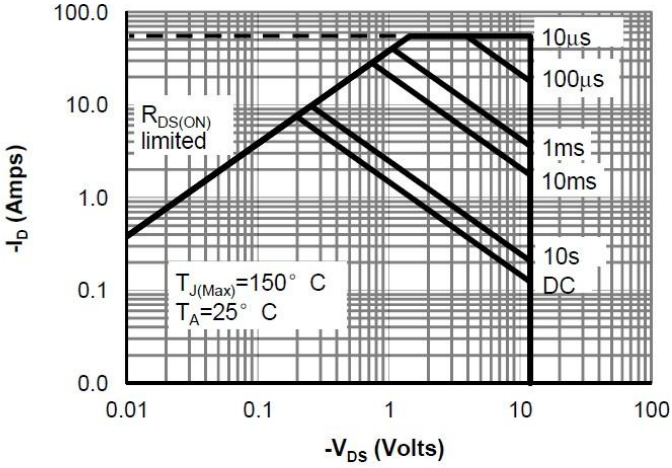

Figure 10: Maximum Forward Biased Safe Operating Area

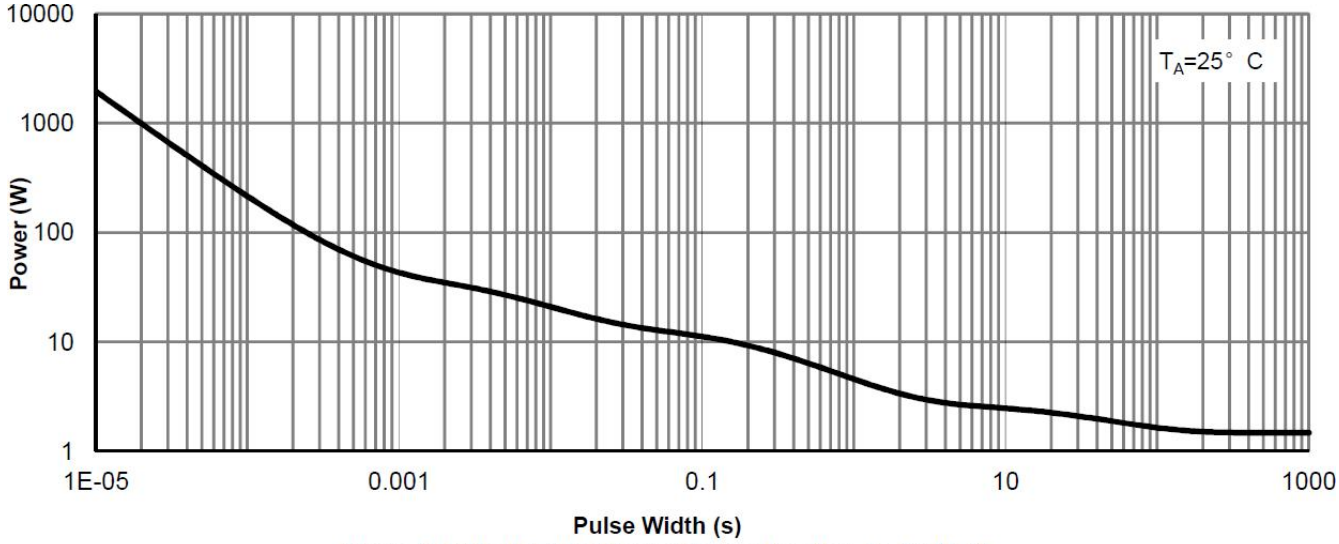

Figure 11: Single Pulse Power Rating Junction-to-Ambient

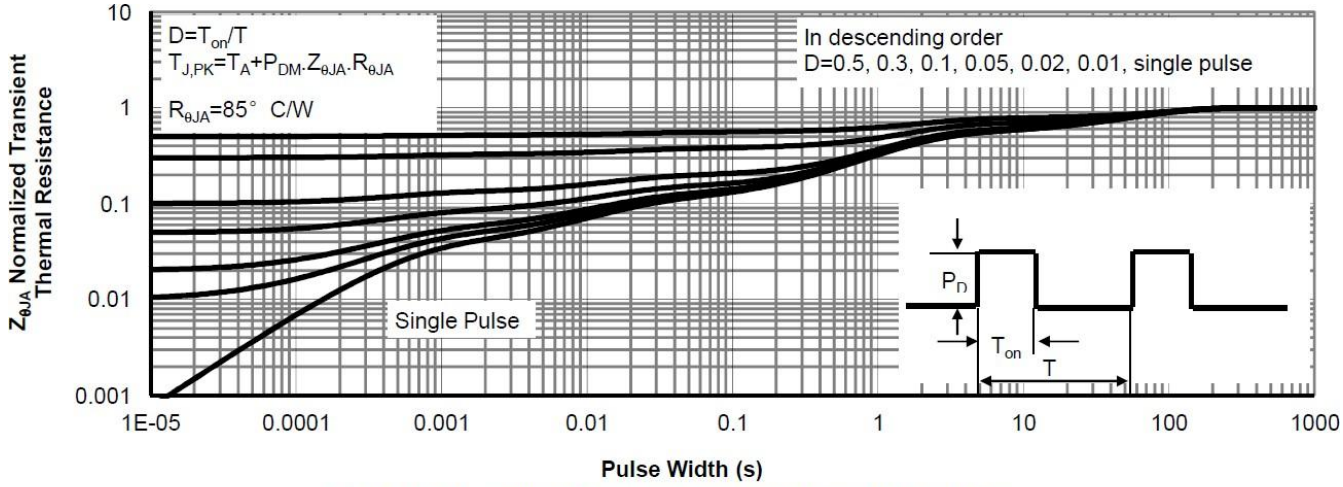

Figure 12: Normalized Maximum Transient Thermal Impedance

Gate Charge Test Circuit & Waveform

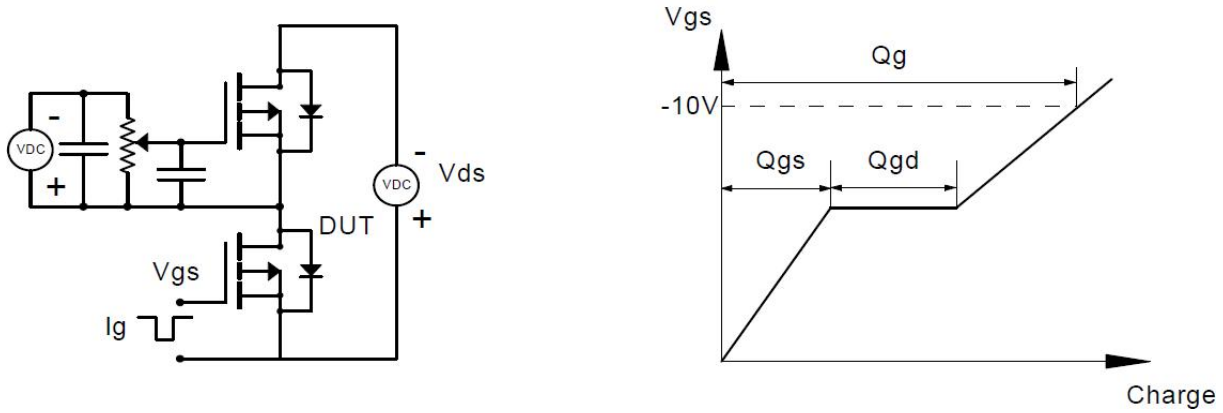

Resistive Switching Test Circuit & Waveforms

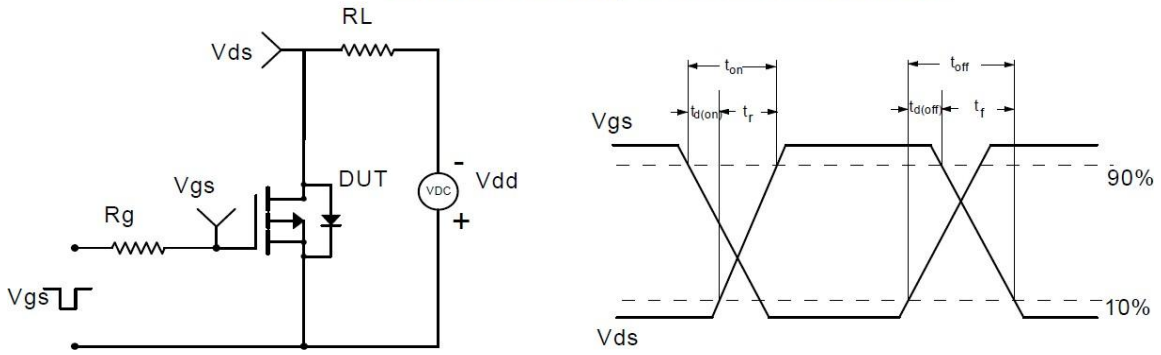

Unclamped Inductive Switching (UIS) Test Circuit & Waveforms

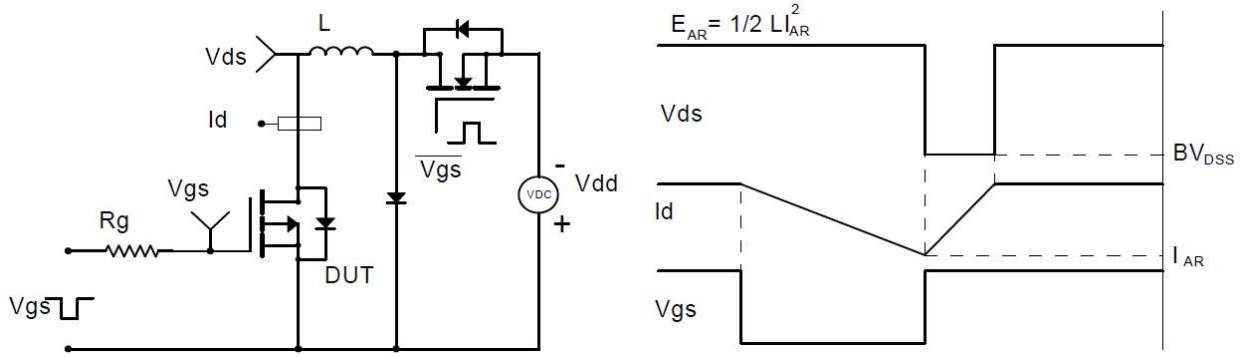

Diode Recovery Test Circuit & Waveforms

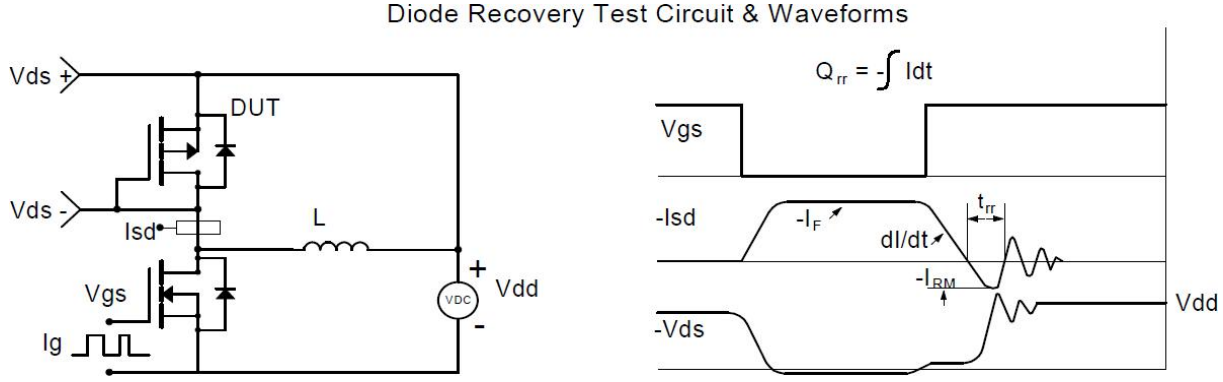

Package Information

- **DFN2*2-6L-B**

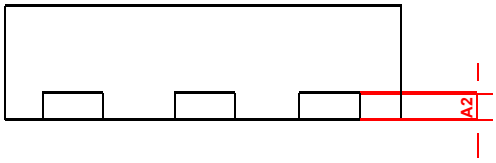

SIDE VIEW

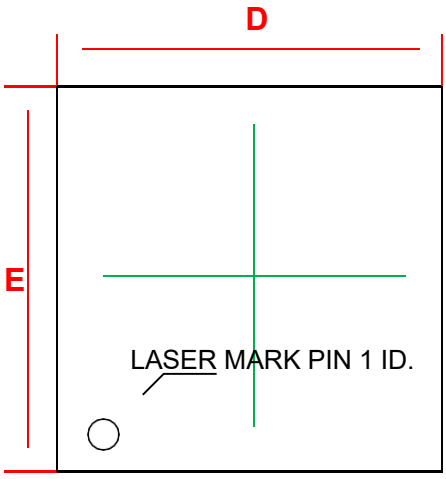

TOP VIEW

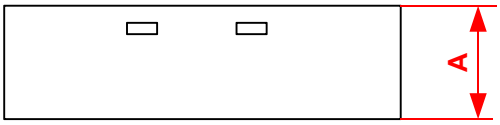

SIDE VIEW

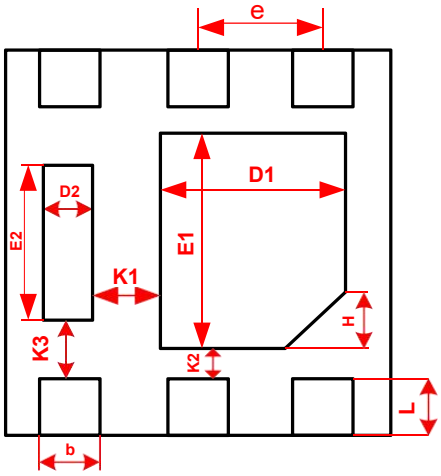

BOTTOM VIEW

Common Dimension (mm)			
PKG	DFN2020-6L-B		
SYMBOL	MIN.	MON.	MAX.
A	0.527	0.552	0.577
A2		0.127REF	
b	0.25	0.30	0.35
D	1.90	2.00	2.10
E	1.90	2.00	2.10
D1	0.85	0.95	1.05
E1	1.05	1.15	1.25
D2	0.20	0.25	0.30
E2	0.69	0.79	0.89
e	0.55	0.65	0.75
H	0.25	0.30	0.35
K1	0.25MIN		
K2	0.15MIN		
K3	0.20MIN		
L	0.20	0.25	0.30

Tape and Reel

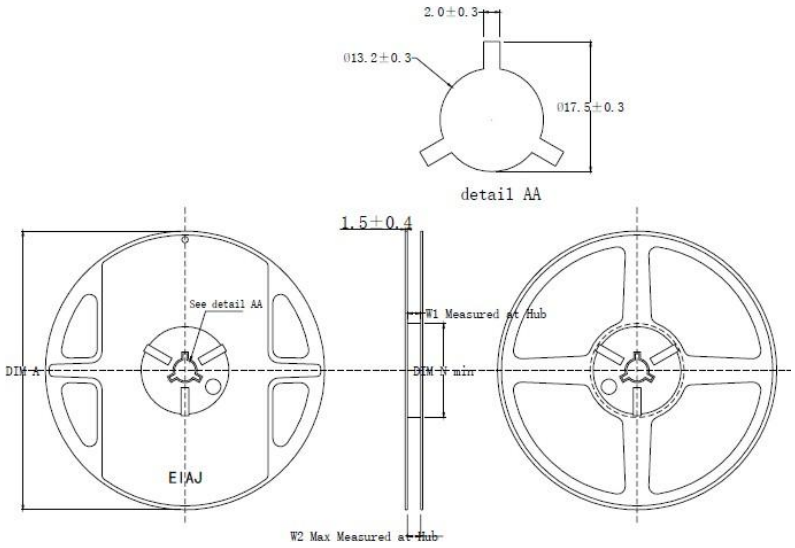

PRODUCT SPECIFICATIONS				
TYPE WIDTH	ØA	ØN	W1 (Min)	W2 (Max)
8MM	178±2.0	60±1.0	8.4	11.4
12MM	178±2.0	60±1.0	12.4	15.4

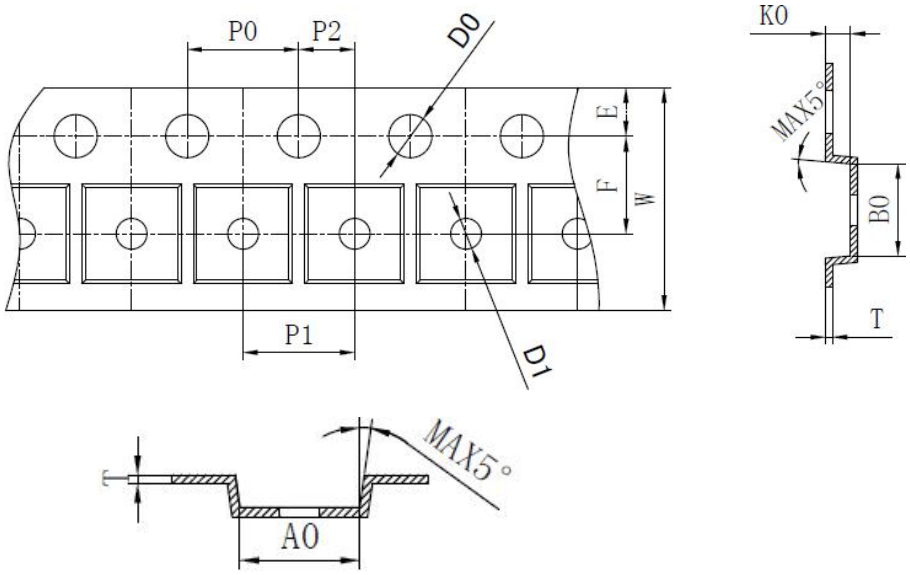

SYMBOL	A0	B0	K0	P0	P1	P2
SPEC	2.20±0.05	2.20±0.05	0.75±0.10	4.00±0.10	4.00±0.10	2.00±0.05
SYMBOL	T	E	F	D0	D1	W
SPEC	0.20±0.03	1.75±0.10	3.50±0.05	1.55±0.05	$1.00^{+0.10}_{-0}$	$8.00^{+0.20}_{-0.10}$