20V P-Channel Enhancement Mode MOSFET

Description

The PECN3415EMR uses advanced trench technology to provide excellent $R_{DS(ON)}$, low gate charge and operation with gate voltages as low as 1.8V. This device is suitable for use as a load switch or in PWM applications.

General Features

- V_{DS} =-20V，I_D =-4A
  $R_{DS(ON)}$(Typ.)=46mΩ @V_{GS}=-2.5V
  $R_{DS(ON)}$(Typ.)=38mΩ @V_{GS}=-4.5V
- High power and current handing capability
- Lead free product is acquired
- Surface mount package
- ESD Rating: 2500V HBM

Application

- PWM applications
- Load switch

Package

- SOT-23-3L

Schematic diagram

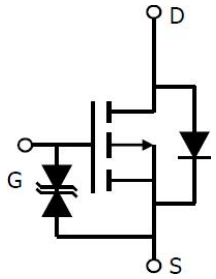

Marking and pin assignment

SOT-23-3L
(TOP VIEW)

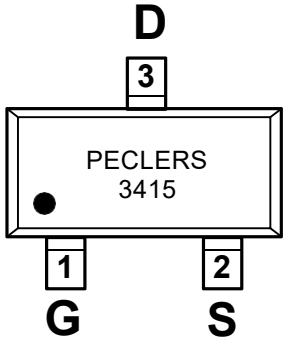

Ordering Information

Part Number	Storage Temperature	Package	Devices Per Reel
PECN3415EMR	-55°C to +150°C	SOT-23-3L	3000

Absolute Maximum Ratings (TA=25℃ unless otherwise noted)

parameter		symbol	limit	unit
Drain-source voltage		V_{DS}	-20	V
Gate-source voltage		V_{GS}	±8	V
Continuous Drain Current	T_A=25℃	I_D	-4	A
	T_A=70℃		-3	
Pulsed Drain Current [C]		I_{DM}	-20	A
Maximum power dissipation [B]	T_A=25℃	P_D	1.4	
	T_A=70℃		0.9	W
Operating junction Temperature range		Tj	-55—150	℃

Electrical Characteristics (TA=25℃ unless otherwise noted)

Parameter	Symbol	Condition	Min	Typ	Max	Unit
OFF Characteristics						
Drain-source breakdown voltage	BV_{DSS}	V_{GS}=0V, I_D=-250μA	-20	-	-	V
Zero gate voltage drain current	I_{DSS}	V_{DS}=-20V, V_{GS}=0V	-	-	-1	μA
Gate-body leakage	I_{GSS}	V_{DS}=0V, V_{GS}=±8V	-	-	±10	μA
ON Characteristics						
Gate threshold voltage	$V_{GS(th)}$	V_{DS} =V_{GS}, I_D=-250μA	-0.4	-0.59	-0.9	V
Drain-source on-state resistance	$R_{DS(ON)}$	V_{GS}=-4.5V, I_D=-4A	-	38	45	mΩ
		V_{GS}=-2.5V, I_D=-3A	-	46	55	
Forward transconductance	gfs	V_{GS}=-5V, I_D=-4A	8	-	-	S
Dynamic Characteristics						
Input capacitance	C_{ISS}	V_{DS}=-10V ,V_{GS}=0V f=1.0MHz	-	751	-	pF
Output capacitance	C_{OSS}		-	115	-	
Reverse transfer capacitance	C_{RSS}		-	80	-	
Switching Characteristics						
Turn-on delay time	$t_{D(ON)}$	V_{DD}=-10V I_D=-2.8A V_{GEN}=-4.5V R_L=10ohm R_{GEN}=-60ohm	-	13	-	ns
Rise time	tr		-	9	-	
Turn-off delay time	$t_{D(OFF)}$		-	19	-	
Fall time	tf		-	29	-	
Total gate charge	Qg	V_{DS}=-10V,I_D=-3A V_{GS}=-4.5V	-	9.3	-	nC
Gate-source charge	Qgs		-	1	-	
Gate-drain charge	Qgd		-	2.2	-	
DRAIN-SOURCE DIODE CHARACTERISTICS						
Diode forward voltage	V_{SD}	V_{GS}=0V,Is=-1.25A	-	-0.81	-1.2	V

Thermal Characteristics

Parameter		Symbol	Typ	Max	Unit
Maximum Junction-to-Ambient[A]	≤ 10s	$R_{\theta JA}$	70	90	℃/W
Maximum Junction-to-Ambient[A D]	Steady-State		100	125	
Maximum Junction-to-Lead[B]	Steady-State	$R_{\theta JL}$	63	80	

A.The value of $R_{\theta JA}$ is measured with the device mounted on 1in2 FR-4 board with 2oz. Copper, in a still air environment with T_A =25°C. The value in any given application depends on the user's specific board design.

B. The power dissipation P_D is based on $T_{J(MAX)}$ =150°C, using ≤ 10s junction-to-ambient thermal resistance.

C.Repetitive rating, pulse width limited by junction temperature $T_{J(MAX)}$ =150°C. Ratings are based on low frequency and duty cycles to keep initialTJ=25°C.

D. The $R_{\theta JA}$ is the sum of the thermal impedence from junction to lead $R_{\theta JL}$ and lead to ambient.

Typical Performance Characteristics

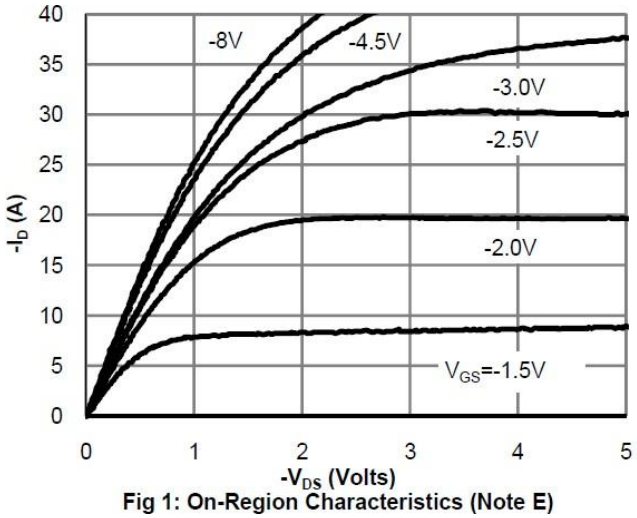

Fig 1: On-Region Characteristics (Note E)

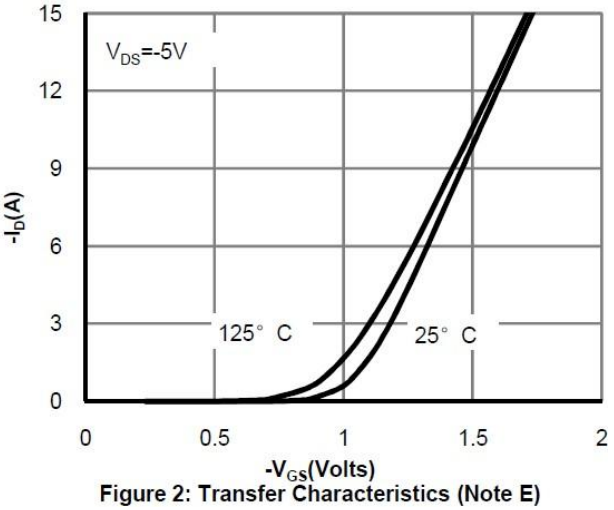

Figure 2: Transfer Characteristics (Note E)

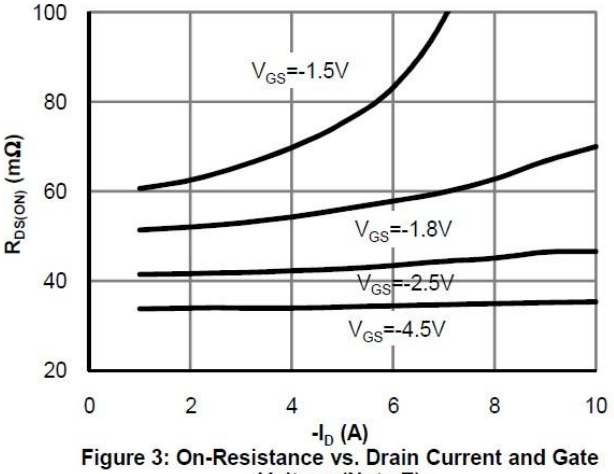

Figure 3: On-Resistance vs. Drain Current and Gate Voltage (Note E)

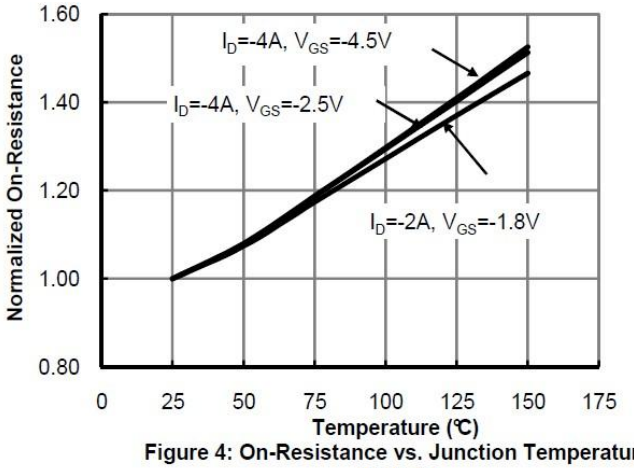

Figure 4: On-Resistance vs. Junction Temperature (Note E)

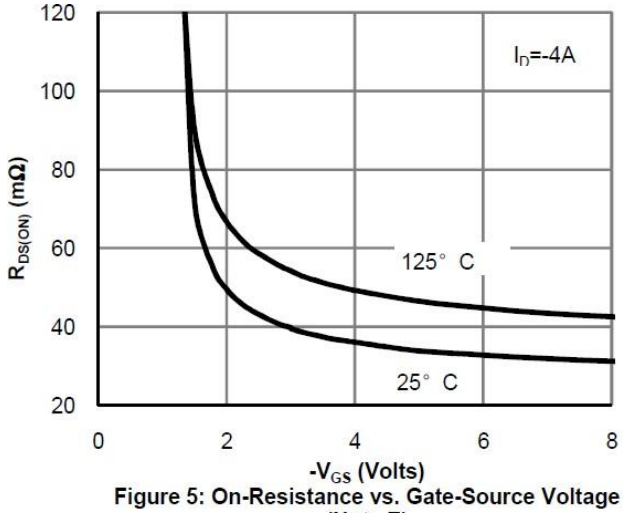

Figure 5: On-Resistance vs. Gate-Source Voltage (Note E)

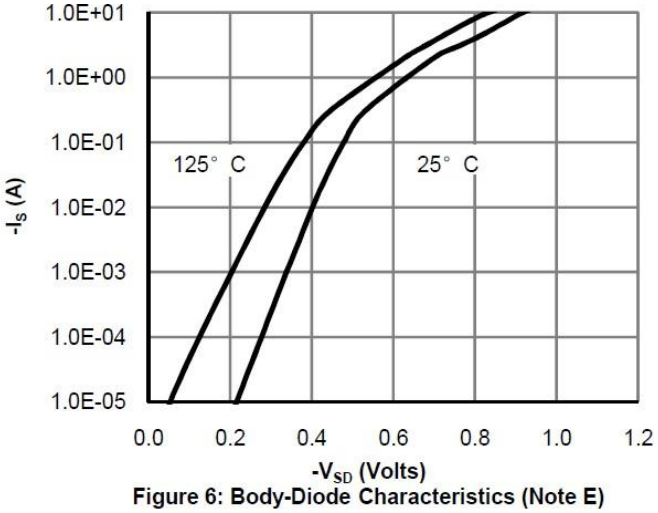

Figure 6: Body-Diode Characteristics (Note E)

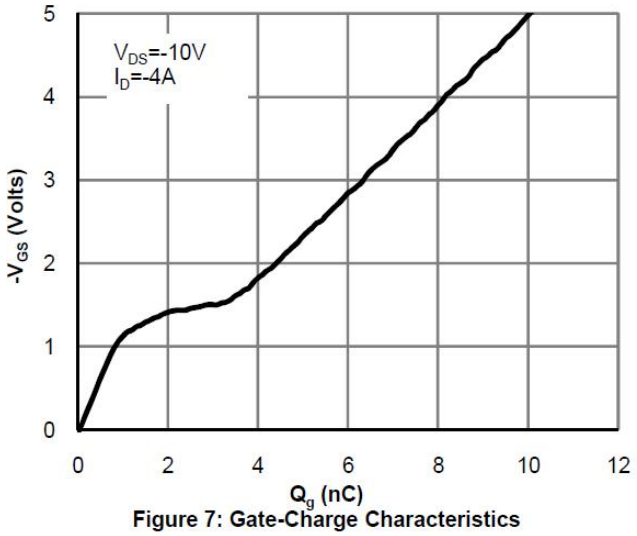

Figure 7: Gate-Charge Characteristics

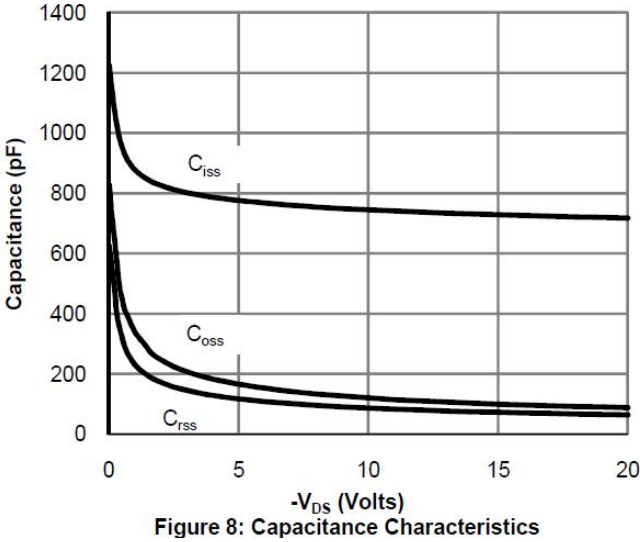

Figure 8: Capacitance Characteristics

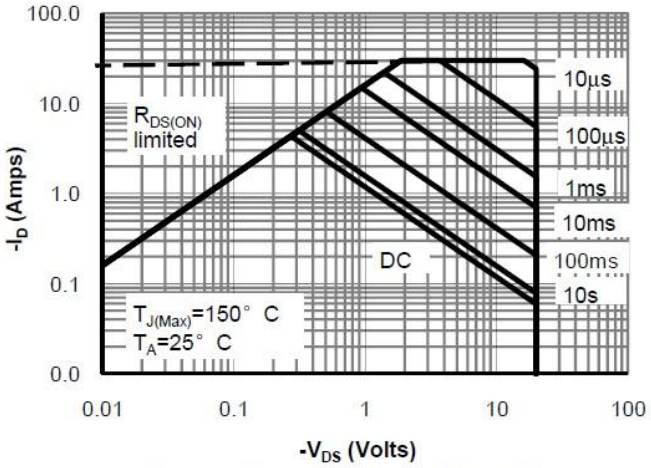

Figure 9: Maximum Forward Biased Safe Operating Area (Note F)

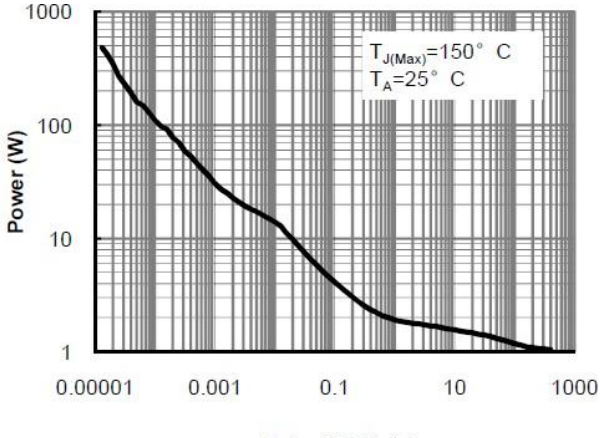

Figure 10: Single Pulse Power Rating Junction-to-Ambient (Note F)

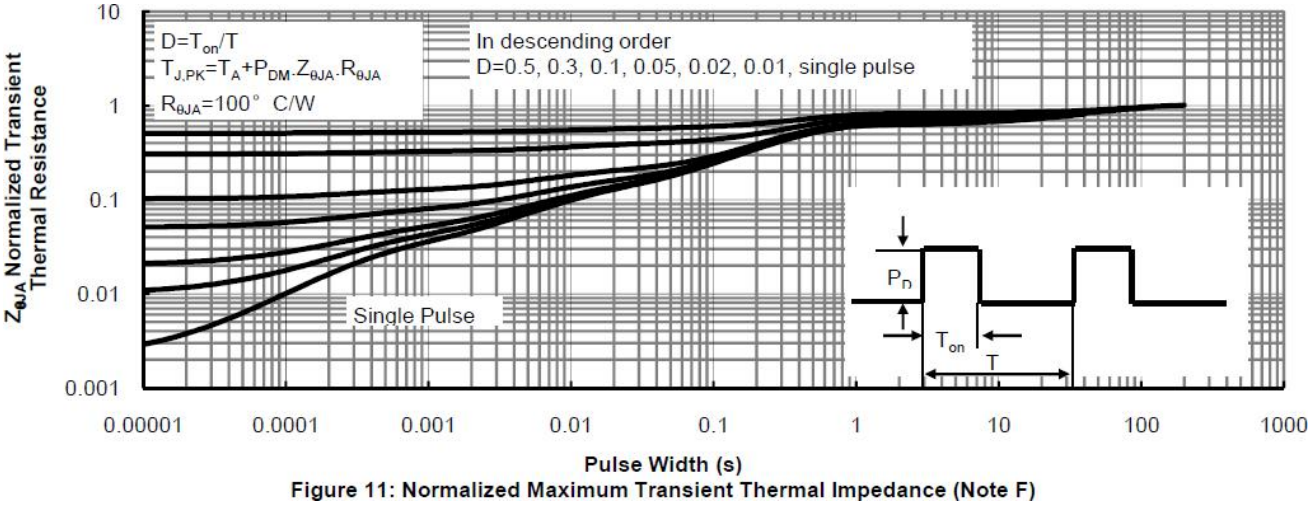

Figure 11: Normalized Maximum Transient Thermal Impedance (Note F)

Gate Charge Test Circuit & Waveform

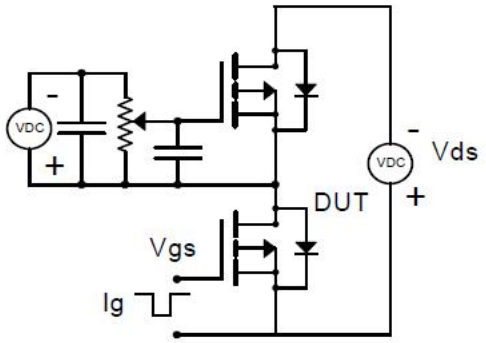

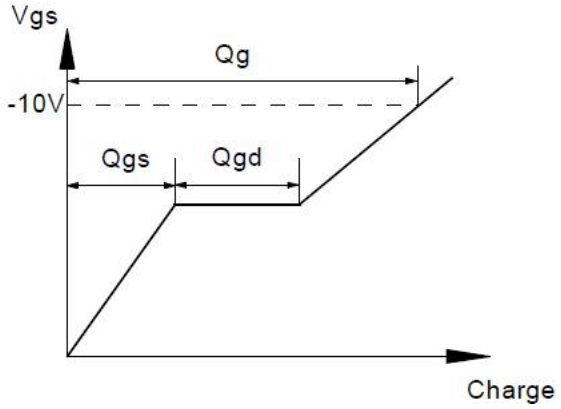

Resistive Switching Test Circuit & Waveforms

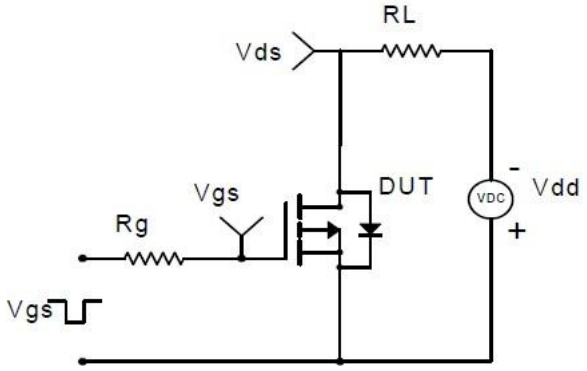

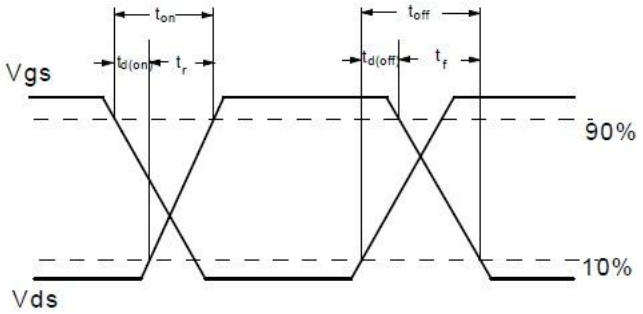

Diode Recovery Test Circuit & Waveforms

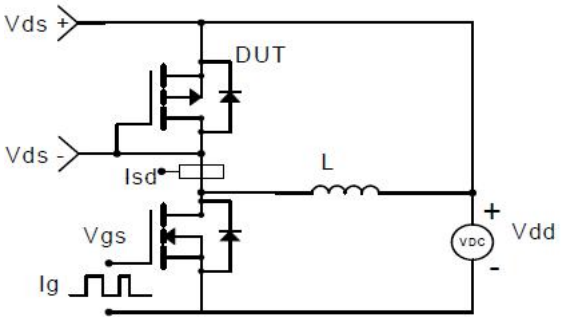

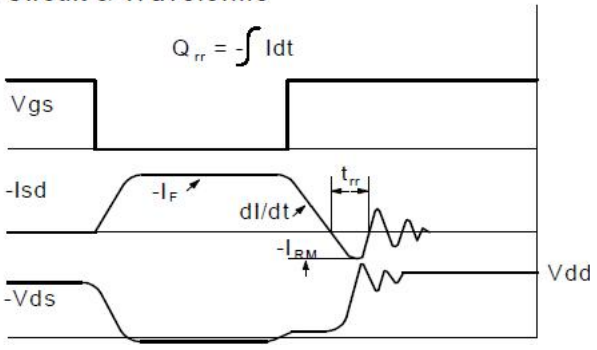

Package Information

- **SOT-23-3L**

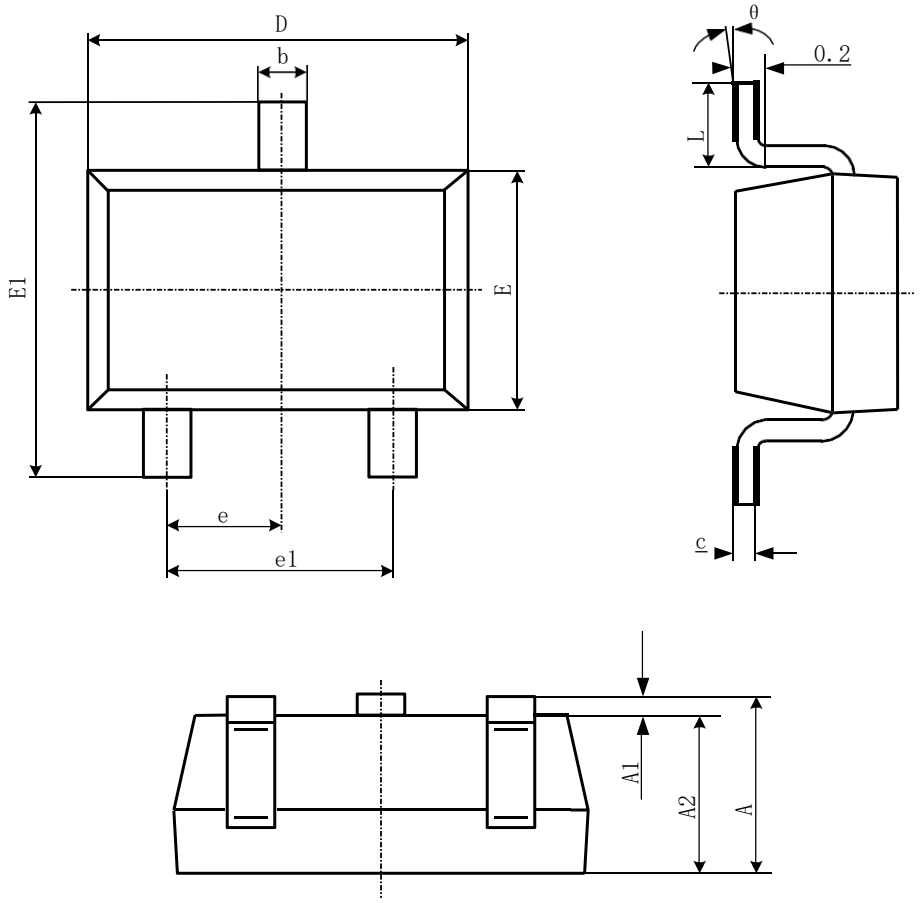

Symbol	Dimensions In Millimeters		Dimensions In Inches	
	Min	Max	Min	Max
A	1.050	1.250	0.041	0.049
A1	0.000	0.100	0.000	0.004
A2	1.050	1.150	0.041	0.045
b	0.300	0.500	0.012	0.020
c	0.100	0.200	0.004	0.008
D	2.820	3.020	0.111	0.119
E	1.500	1.700	0.059	0.067
E1	2.650	2.950	0.104	0.116
e	0.950(BSC)		0.037(BSC)	
e1	1.800	2.000	0.071	0.079
L	0.300	0.600	0.012	0.024
θ	0°	8°	0°	8°