30V P-Channel Enhancement Mode MOSFET

Description

The PECN9435ASR uses advanced trench technology and design to provide excellent $R_{DS(ON)}$ with low gate charge. It can be used in load switch and battery protection applications.

General Features

- V_{DS} =-30V，I_D =-5.5A
  $R_{DS(ON)}$(Typ.)=43mΩ @V_{GS} =-10V
  $R_{DS(ON)}$(Typ.)=55mΩ @V_{GS}=-4.5V
- High power and current handing capability
- Lead free product is acquired
- Surface mount package

Application

- Battery protection
- Load switch

Package

- SOP-8

100% UIS TESTED!
100% ΔVds TESTED!

Schematic diagram

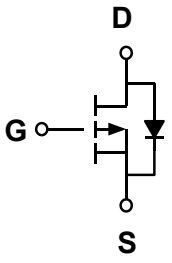

Marking and pin assignment

SOP-8

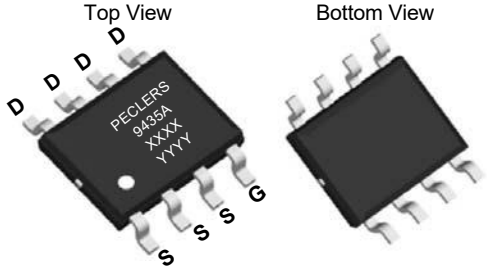

XXXX—Wafer Lot No.
YYYY—Quality code

Ordering Information

Part Number	Storage Temperature	Package	Devices Per Reel
PECN9435ASR	-55°C to +150°C	SOP-8	4000

Absolute Maximum Ratings (TA=25℃ unless otherwise noted)

parameter		symbol	limit	unit
Drain-source voltage		V_{DS}	-30	V
Gate-source voltage		V_{GS}	±20	V
Continuous Drain Current	T_A=25°C	I_D	-5.5	A
	T_A=70°C		-4	
Pulsed Drain Current [C]		I_{DP}	-22	A
Avalanche energy(L=0.1mH) [C]		E_{AS}	10	mJ
Maximum power dissipation [B]	T_A=25°C	P_D	3.1	W
	T_A=70°C		2	
Operating junction Temperature range		T_J	-55—150	℃

Thermal Characteristics

Parameter		Symbol	Typ	Max	Unit
Maximum Junction-to-Ambient[A]	≤ 10s	$R_{\theta JA}$	33	40	℃/W
Maximum Junction-to-Ambient[A D]	Steady-State		59	75	
Maximum Junction-to-Lead[B]	Steady-State	$R_{\theta JL}$	16	24	

A:The value of $R_{\theta JA}$ is measured with the device mounted on 1in2 FR-4 board with 2oz. Copper, in a still air environment with T_A =25°C. The value in any given application depends on the user's specific board design.

B.The power dissipation P_D is based on $T_{J(MAX)}$ =150°C, using ≤ 10s junction-to-ambient thermal resistance.

C.Repetitive rating, pulse width limited by junction temperature $T_{J(MAX)}$ =150°C. Ratings are based on low frequency and duty cycles to keep initial T_J=25°C.

D.The $R_{\theta JA}$ is the sum of the thermal impedence from junction to lead $R_{\theta JL}$ and lead to ambient.

Electrical Characteristics (TA=25℃ unless otherwise noted)

Parameter	Symbol	Condition	Min	Typ	Max	Unit
OFF Characteristics						
Drain-source breakdown voltage	BV_{DSS}	V_{GS} =0V, I_D=-250μA	-30	-	-	V
Zero gate voltage drain current	I_{DSS}	V_{DS}=-30V, V_{GS}=0V	-	-	-1	μA
Gate-body leakage	I_{GSS}	V_{DS}=0V, V_{GS}=±20V	-	-	±100	nA
ON Characteristics						
Gate threshold voltage	$V_{GS(th)}$	V_{DS}=V_{GS}, I_D=-250μA	-0.8	-1.4	-2.5	V
Drain-source on-state resistance	$R_{DS(ON)}$	V_{GS} =-10V, I_D=-5.5A	-	43	60	mΩ
		V_{GS} =-4.5V, I_D=-4A		55	70	
Forward transconductance	gfs	V_{DS}=-5V, I_D=-5.5A	-	7	-	S
Dynamic Characteristics						
Input capacitance	C_{ISS}	V_{DS}=-15V, V_{GS} =0V f=1.0MHz	-	980	-	pF
Output capacitance	C_{OSS}		-	390	-	
Reverse transfer capacitance	C_{RSS}		-	135	-	
Switching Characteristics						
Turn-on delay time	$t_{D(ON)}$	V_{DS}=-15V I_D=-1A V_{GS}=-10V R_{GEN}=6Ω	-	14	-	ns
Rise time	tr		-	12	-	
Turn-off delay time	$t_{D(OFF)}$		-	56	-	
Fall time	tf		-	20	-	
Total gate charge	Qg(10V)	V_{DS}=-15V, I_D=-5.5A V_{GS}=-10V	-	11	-	nC
Total gate charge	Qg(4.5V)		-	5	-	
Gate-source charge	Qgs		-	2.0	-	
Gate-drain charge	Qgd		-	2.8	-	
DRAIN-SOURCE DIODE CHARACTERISTICS						
Diode forward voltage	V_{SD}	V_{GS}=0V, Is=-1.0A	-	-0.75	-1.0	V

Typical Performance Characteristics

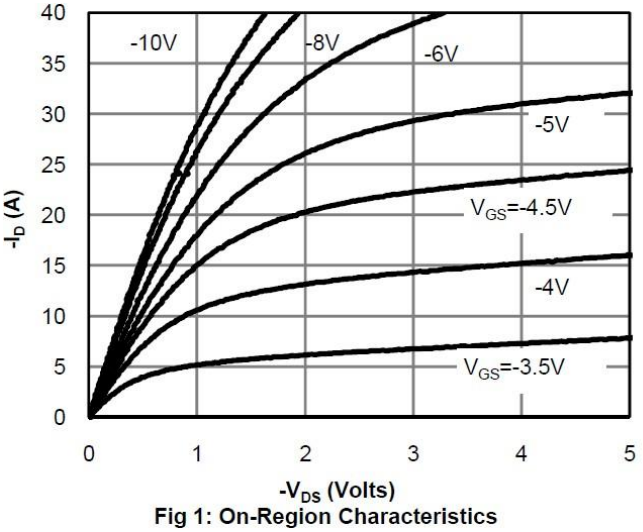

Fig 1: On-Region Characteristics

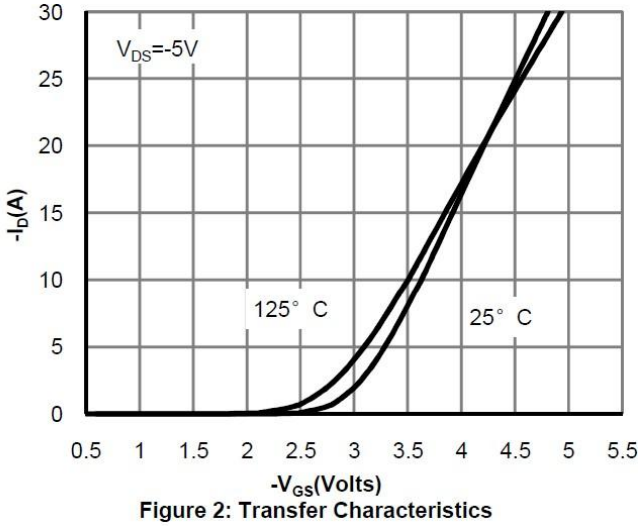

Figure 2: Transfer Characteristics

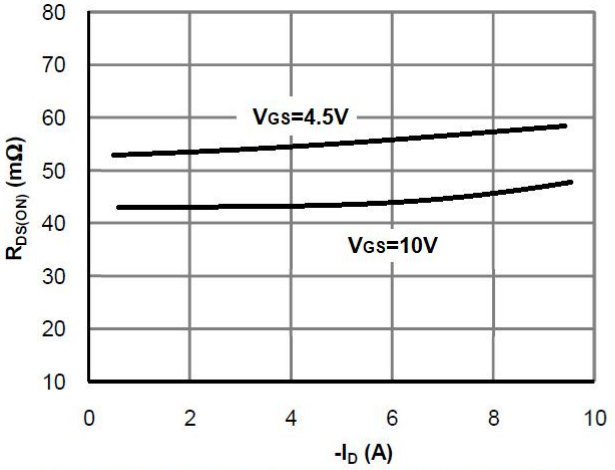

Figure 3: On-Resistance vs. Drain Current and Gate Voltage

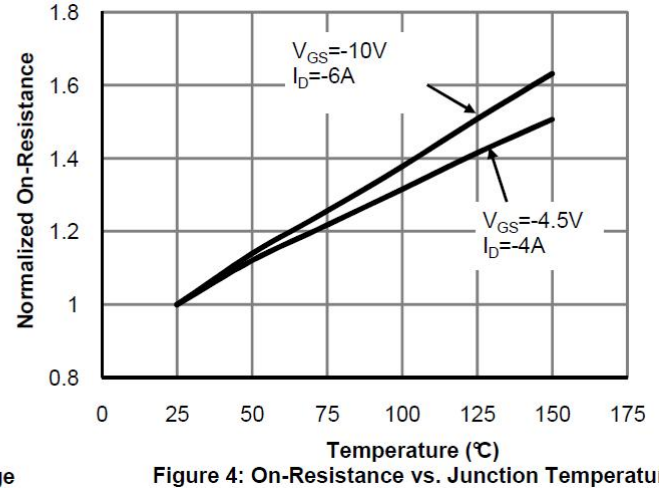

Figure 4: On-Resistance vs. Junction Temperature

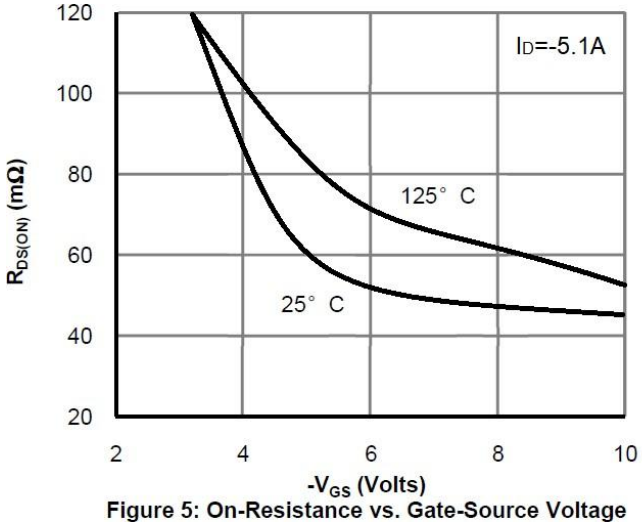

Figure 5: On-Resistance vs. Gate-Source Voltage

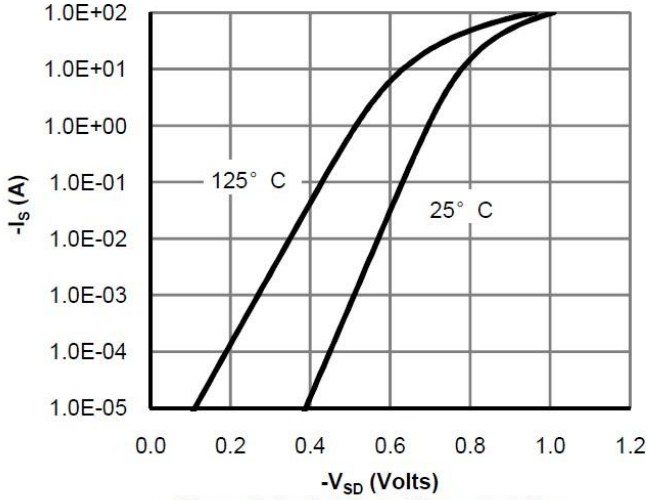

Figure 6: Body-Diode Characteristics

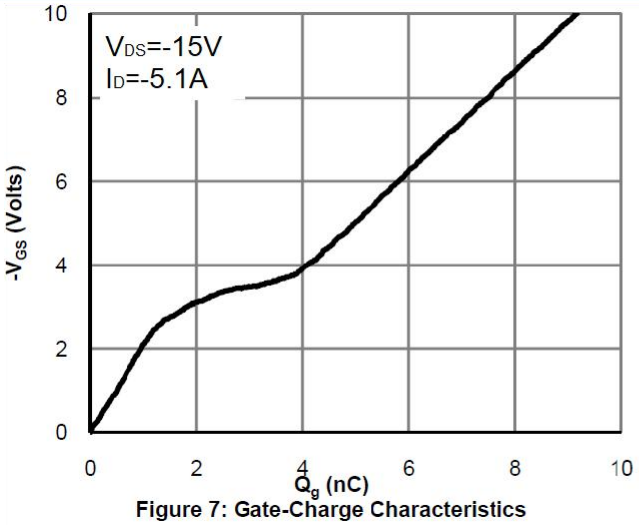

Figure 7: Gate-Charge Characteristics

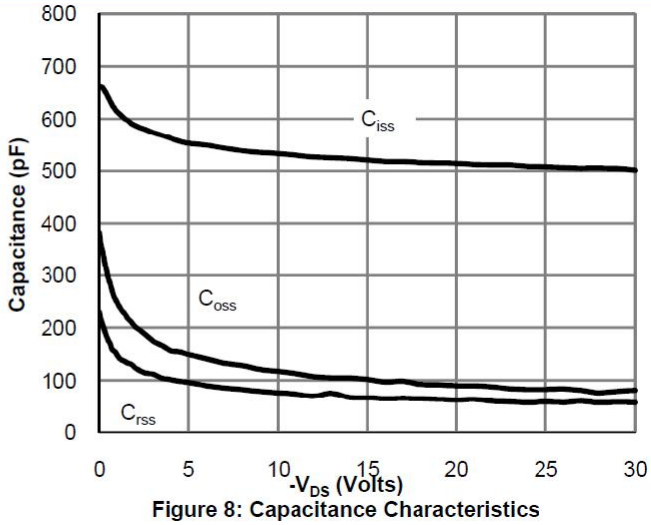

Figure 8: Capacitance Characteristics

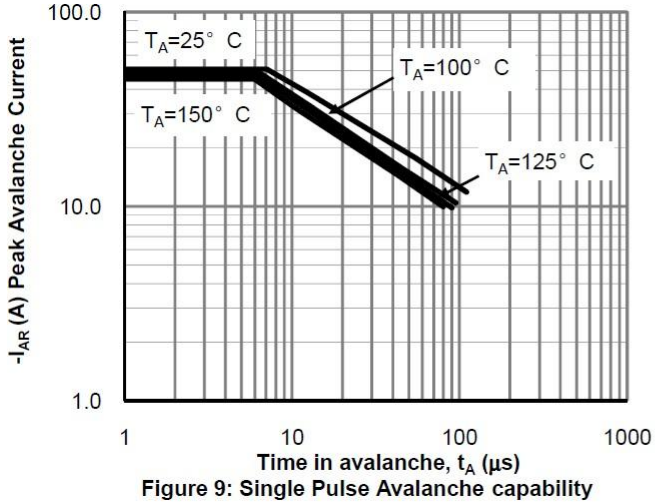

Figure 9: Single Pulse Avalanche capability

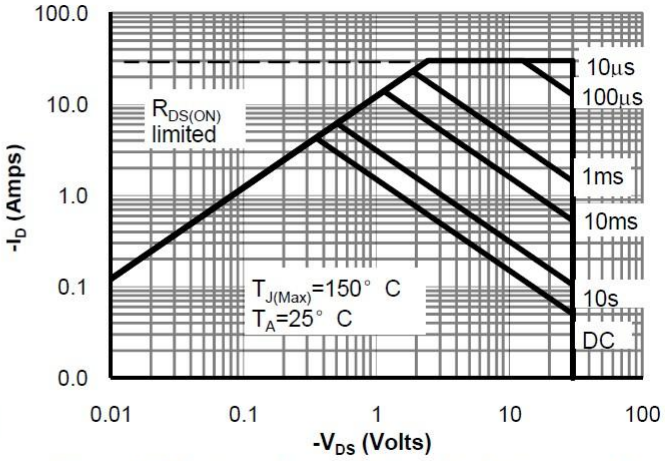

Figure 10: Maximum Forward Biased Safe Operating Area

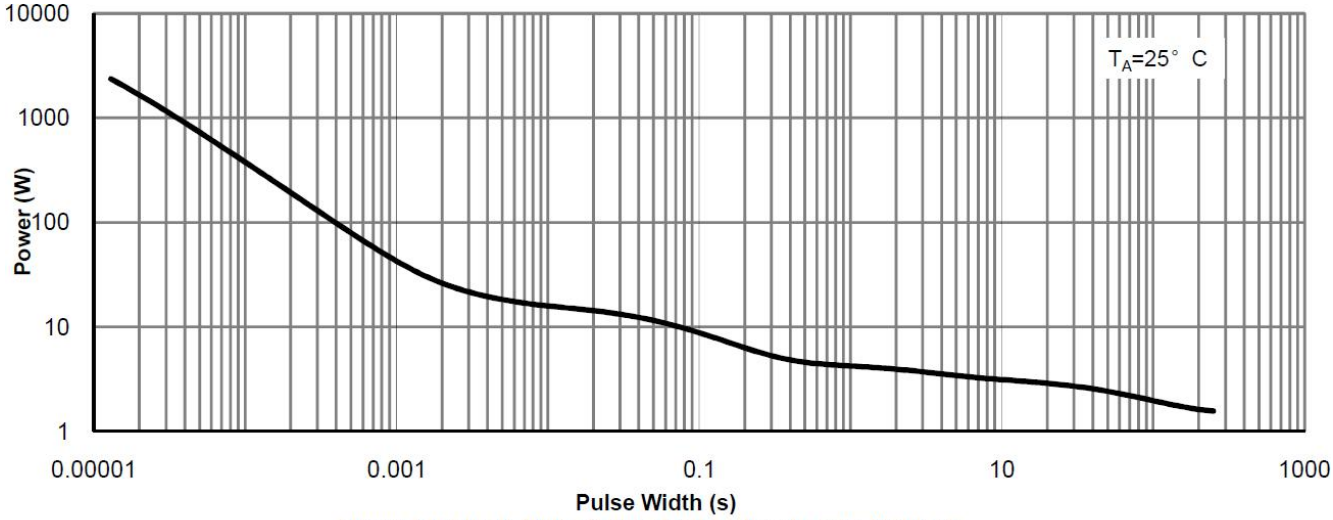

Figure 11: Single Pulse Power Rating Junction-to-Ambient

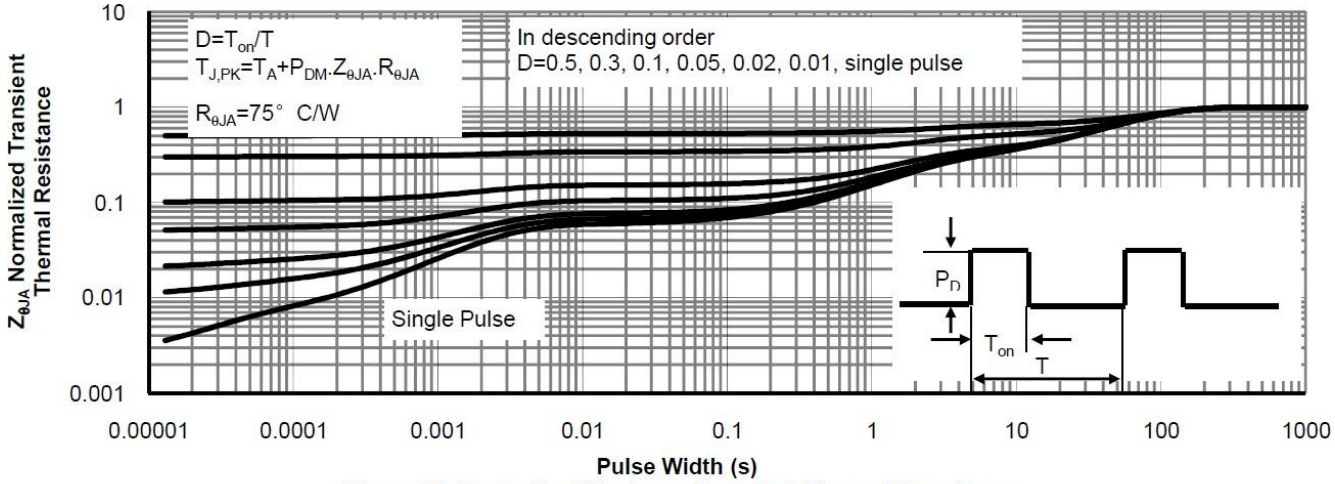

Figure 12: Normalized Maximum Transient Thermal Impedance

Gate Charge Test Circuit & Waveform

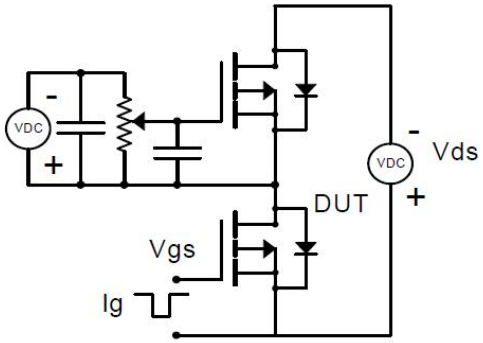

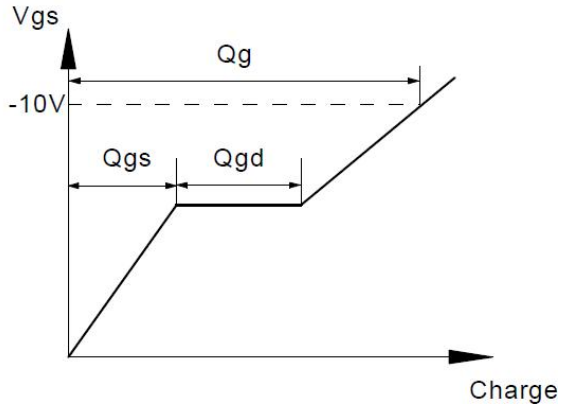

Resistive Switching Test Circuit & Waveforms

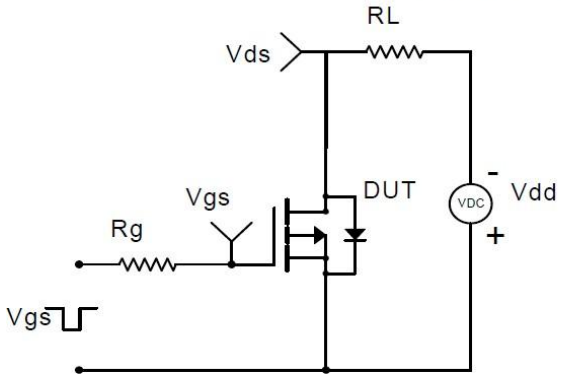

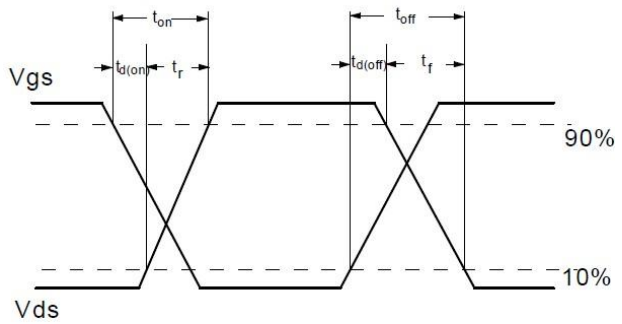

Unclamped Inductive Switching (UIS) Test Circuit & Waveforms

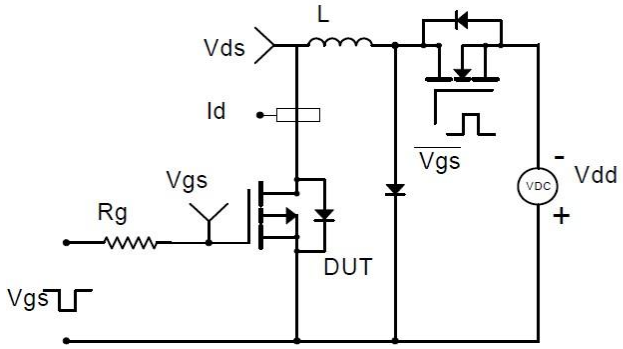

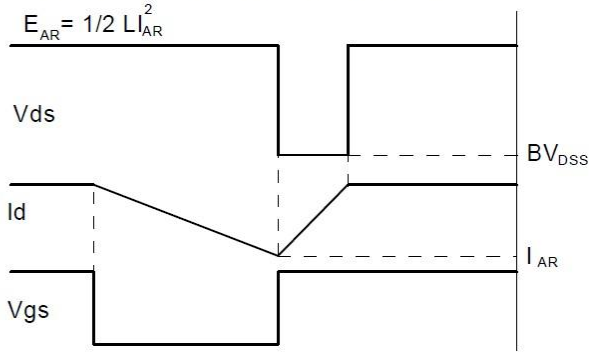

Diode Recovery Test Circuit & Waveforms

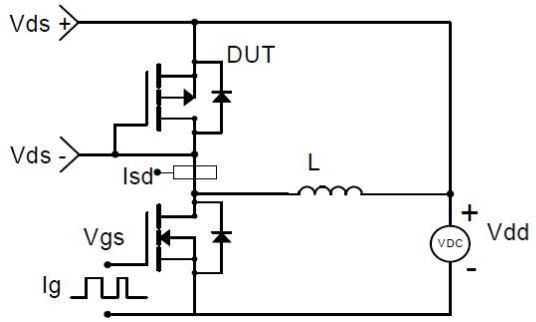

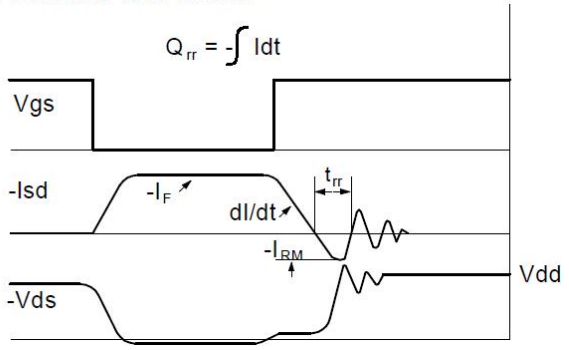

Package Information

- **SOP-8**

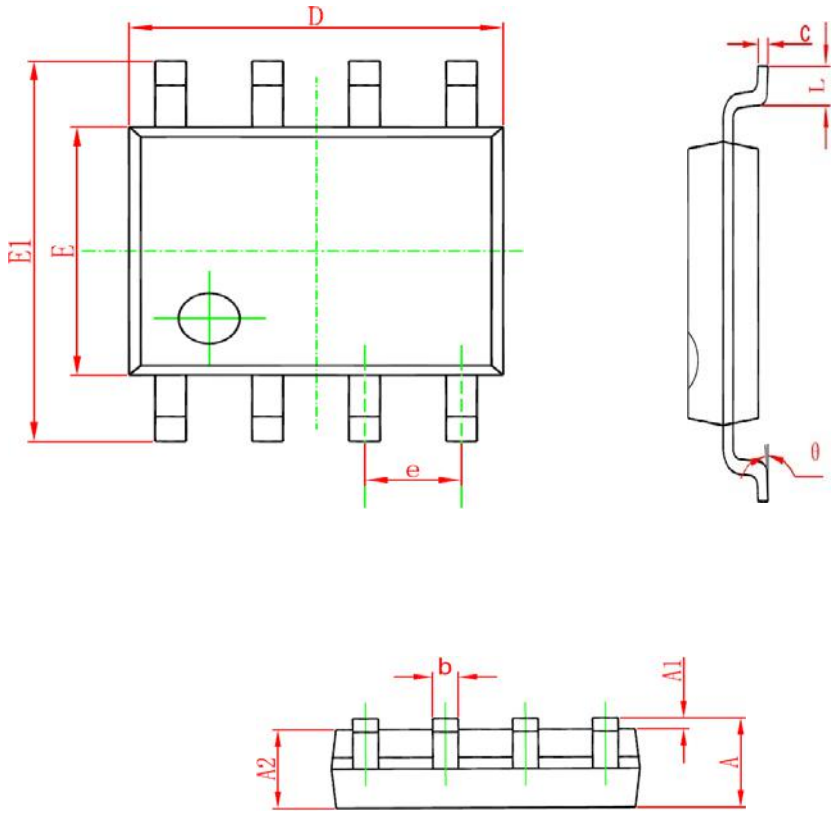

Symbol	Dimensions In Millimeters		Dimensions In Inches	
	Min	Max	Min	Max
A	1.350	1.750	0.053	0.069
A1	0.100	0.250	0.004	0.010
A2	1.350	1.550	0.053	0.061
b	0.330	0.510	0.013	0.020
c	0.170	0.250	0.006	0.010
D	4.700	5.100	0.185	0.200
E	3.800	4.000	0.150	0.157
E1	5.800	6.200	0.228	0.244
e	1.270(BSC)		0.050(BSC)	
L	0.400	1.270	0.016	0.050
θ	0°	8°	0°	8°

Recommended Minimum Pads

- **SOP-8**

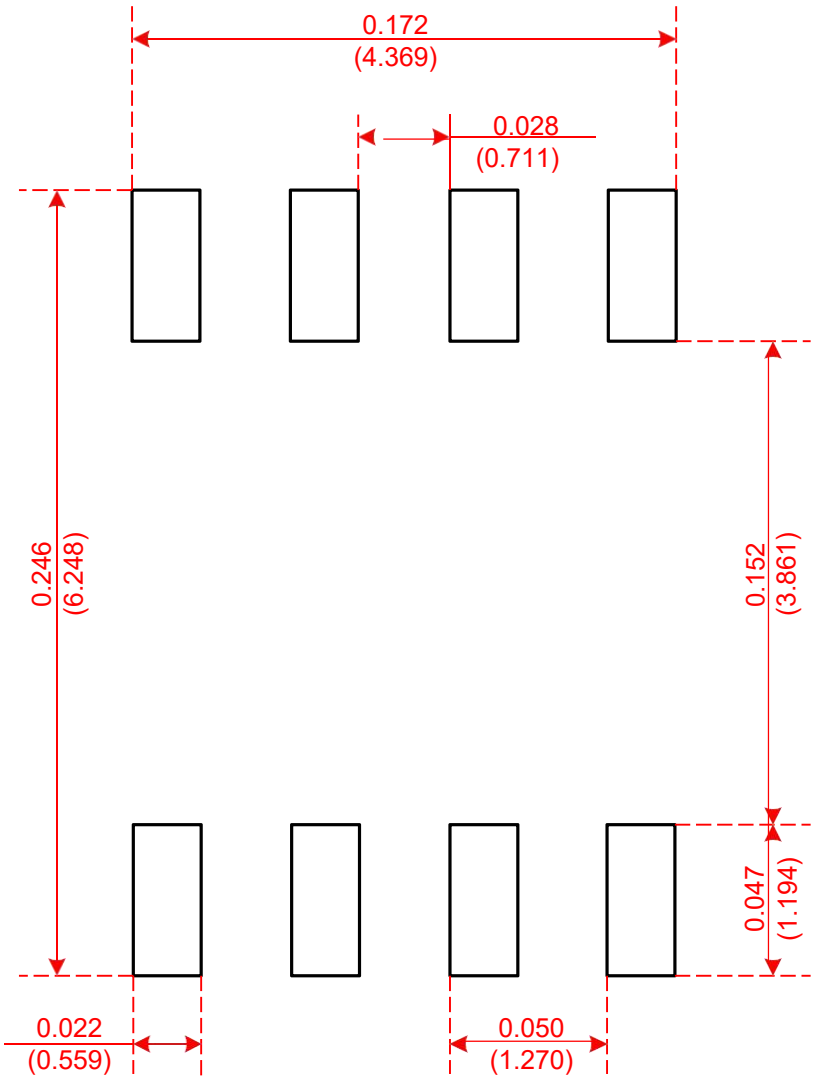

Recommended Minimum Pads
Dimensions in Inches/(mm)

Tape and Reel

- **SOP-8**

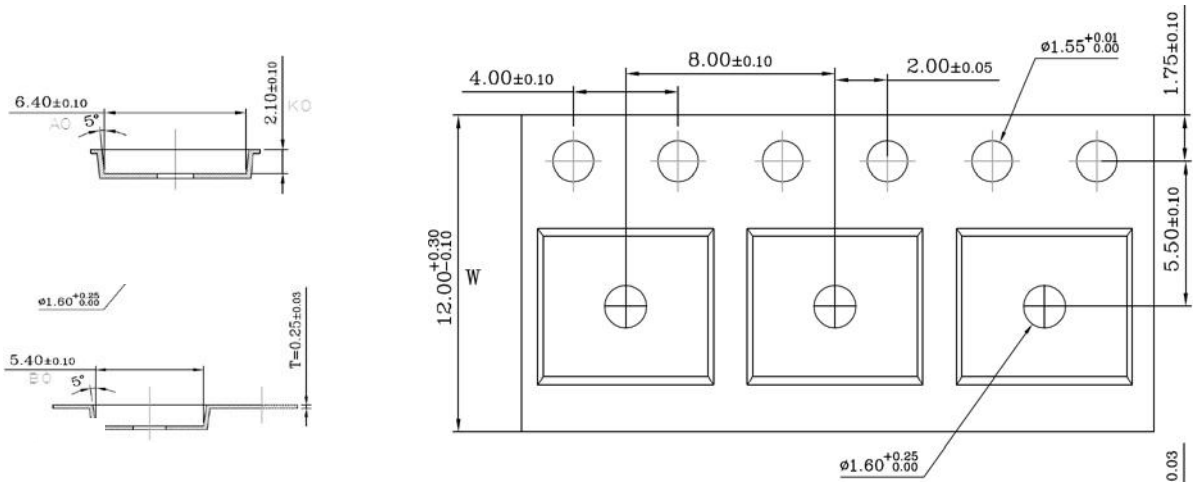

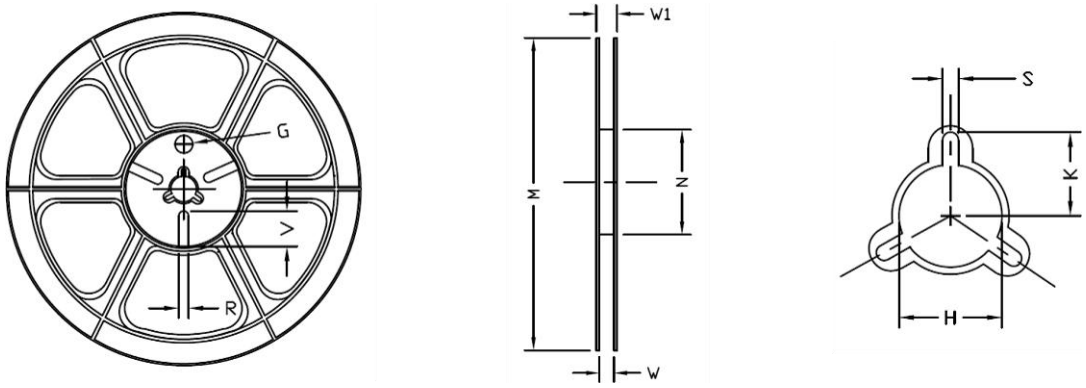

Tape Size	Reel Size	M	N	W	W1	H	K	S	G	R	V
12mm	Φ330	Φ330.00 ±0.50	Φ97.00 ±0.30	13.00 ±0.30	17.40 ±1.00	Φ13.00 ±0.5	10.6	2.00 ±0.50	—	—	—

Unit Per Reel:
4000pcs